IJEAST

INTERNATIONAL JOURNAL
OF ENGINEERING APPLIED SCIENCE
AND TECHNOLOGY

VOLUME : 1 **ISSUE : 2** **Print / Issue Publication Date: 08-Oct-2016**

ISSN : 2455-2143

Indexed In

Google SCHOLAR · OPEN ACCESS · doi · Crossref

WWW.IJEAST.COM

editor@ijeast.com

International Journal of Engineering Applied Sciences and Technology, 2015
Vol. 1, Issue-2, ISSN No.2455-2143, Pages 15-18
Published Online December– January 2016 in IJEAST (http://www.ijeast.com)

EVALUATING THE DYNAMICS OF HEXAPOD TYPE ROBOT

Engr. Muhammad Asif Khan Engr. Zeeshan Asim Asghar Muhammad Hussain
Iftekharuddin H. Farooqui Kamran Mumtaz

Department of Electronic Engineering,
Sir Syed University of Engineering and Technology,
Karachi, Pakistan

Abstract—Robotics is the division of engineering which deals with the manufacturing, production and application of robots. There are many types of robots like Ariel, ground, wheeled, industrial, mobile robots etc. Spider robot is a type of ground robot capable of walking. Current status of this project is that our robot can freely move along all axes and can climb on stairs too. Till now our spider can be controlled by a wireless control remote. The robot can be used for both indoor and outdoor purposes. The project's main hardware includes Arduino, IP camera and servo motors. This robot ideal case is to work according to our instructions like climbing the stairs, rotating in all direction for video surveillance etc. The robot can be regarded as a basic prototype for a robot which works according to our instructions or can make its own decisions, based on the sensors output, and then executes those decisions using servo motors to change the position or to move in a require pattern.

Keywords—Degree of freedom, robotics, roll, hardware interface, yaw movement

I. INTRODUCTION

Our project is a six legged hexapod type robot. Its structure is like a spider and it is capable of walking even in hurdles and obstacles that are most commonly present everywhere. The basic advantage of such a robot is that it can even work in those areas where sliding and rolling or wheels based robot reach a limitation.

It has six legs with three joints in each leg which works

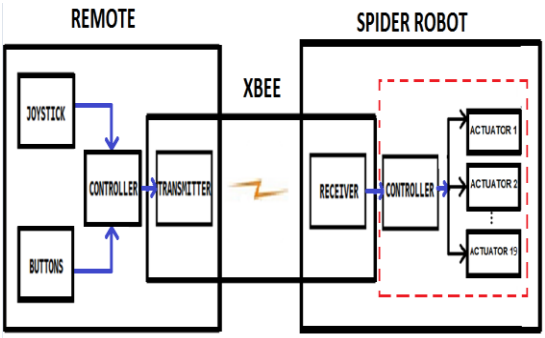

in the same way as human hand (shoulder, arm and wrist). Each leg has a three degree of freedom (DOF). Sonar's are used as a distance sensor which will help it to detect the obstacles and hurdles on its way. It looks like a real spider except for its large size. It has no complexity and can be used for a number of purposes. It has vast scope in future and with the passage of time its importance and capabilities will be increased.

Most legged robots like hexapod are very complex and expensive. But our spider is relatively cheap and simple. Its whole structure is acrylic based.

The processor is an Arduino based microcontroller which is used for controller whereas actuators are basically servo motors which provide rotation of each joint at their respective angles.

II. METHODOLOGY

The spider is controlled by remote which will be based on zig-bee module. The receiver of the zig-bee module will be placed in the mechanical structure of spider. The remote consist of six buttons and two joystick controllers. The spider will then analyze the data and will control the actions of the robot. The spider robot consists of six legs. Each leg contains three servo motors. The two servo controls the Pitch movement and the third motor controls the Yaw movement. There are nineteen servo motors in our

International Journal of Engineering Applied Sciences and Technology, 2015
Vol. 1, Issue-2, ISSN No.2455-2143, Pages 15-18
Published Online December– January 2016 in IJEAST (http://www.ijeast.com)

spider robot. According to six legs, eighteen controls them and last one controls the movement of camera. An IP camera is used for real time video transmission. The camera is mounted on a servo motor to allow for free movement. The video will be viewed on a smart phone using special android app.

III. REFERENCE ARCHITECTURE

Fig.1. Block Diagram of Spider Robot

The mechanical based design of each leg of spider robot is based on a manipulator which functions in a similar fashion just like a regular spider leg.

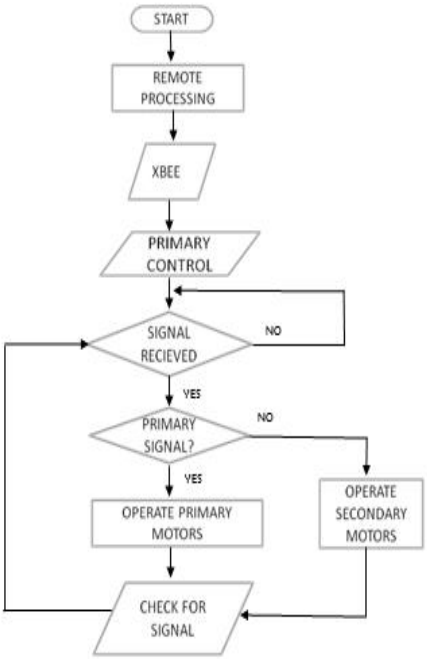

Fig.2. Flow Diagram of System

Wireless communication is done using zig-bee transmitter and zig-bee receiver. The zig-bee transmitter is on the remote side where as zig-bee receiver is at the robot side. Primary and secondary control is based on Atmega-328 which further controls the motors. For operating servo motor we need DC power supply that's why we have attached an external battery. This DC battery supplies each motor. There is no need of gearbox because of the internal structure of servo motor. The advantage of using servo motor is that there is no need of motor controlled circuit (H-bridge).

IV. DESIGN PHASE

A. Electronics

The robot electronics consists of an AVR microcontroller and a power supply (battery). The graph shown ahead shows the position of the leg and helps us in determining the position of the spider robot. The motors used are servo motors with maximum rotation angle of 180 degrees (210 degree maximum). A lithium polymer battery is used as power source for the entire system. We used an AVR controller. We plan to design a remote with six buttons and two analog controllers (joystick).At the robot side two control circuits are placed in the robot body; primary and secondary controllers.

B. Mechanical

The robotic leg has 3 joints and 2 links. The base is at the center supported by six legs[2]. The length of each leg is the total length of the two links plus its joints. Each link length can be designed as the requirement of the situation. It can be of equal length or can have different lengths. Each leg has 3 degrees of freedom just as the hand movement of our hand. A servo motor is located at each joint for the link rotation.

First of all we did some trials to design the motion of the foot (part of the leg which touches the ground). This process was done to describe the motion of spider robot. The foot was finished to move in one dimension along a line drawn on figure [3]. The leg 1 is at 45 degrees, leg 2 is at 90 degrees, leg3 is at 135 degrees. Similarly leg4 leg5 leg6 are at -135,-90,-45 degrees respectively.

International Journal of Engineering Applied Sciences and Technology, 2015
Vol. 1, Issue-2, ISSN No.2455-2143, Pages 15-18
Published Online December– January 2016 in IJEAST (http://www.ijeast.com)

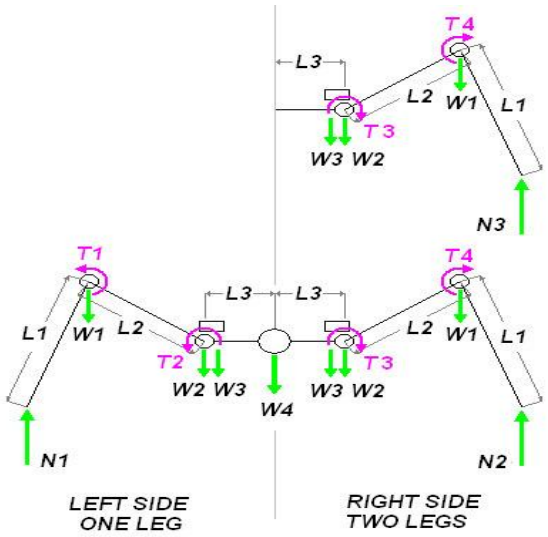

Fig 3.

Movement of Spider Leg

C. Dimensions

Leg length = 11 inches
Body length = 11 inches
Body width = 8 inches
Body diagonal = 14 inches
Full body with legs open horizontally = 30 inches
Full body with legs open vertically = 33 inches
Full body with legs open diagonally = 37 inches
Height with camera = 7.5 inches
Height without camera = 3 inches

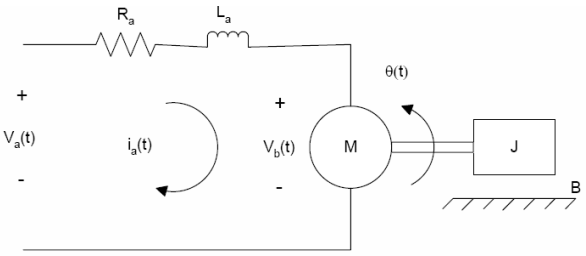

International Journal of Engineering Applied Sciences and Technology, 2015
Vol. 1, Issue-2, ISSN No.2455-2143, Pages 15-18
Published Online December– January 2016 in IJEAST (http://www.ijeast.com)

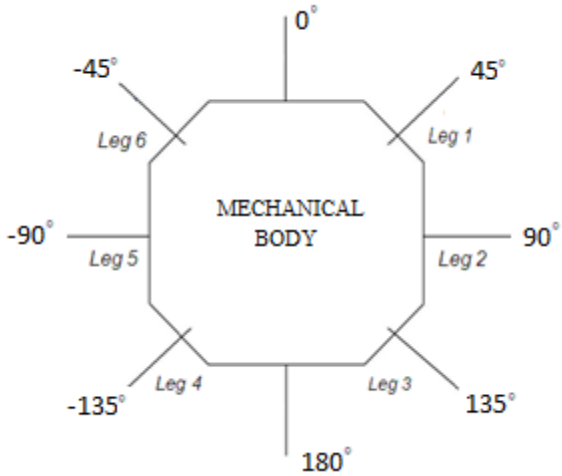

Fig.3. Angular Position of Spider's Leg

V. COMPONENTS

A. Servo Motor

Servo motor is a type of motor used for precision working and control. They are basically used in a closed loop control system. They are mainly used in robotics field, automated and machinery manufacturing machines. It uses position feedback to control the final motion and position (output).

These motors work by sending pwm signal at its input. These motor can turn 90 degree at each side (180 degree total). The duration of input pulse determines the final position of rotor. It checks for a signal after every 20ms. Let's say it require a 1.5ms pulse to turn motor at 90 degree position. Lower than this move it towards 0 degree and higher moves it towards 180 degrees position.

The motor we are using is MG995. Its operating voltage is 4.8V to 7.2V. It contains 3 pins; one is connected with positive terminal of battery, second pin with the ground terminal of battery; finally the third pin is for the control signal that operates the motor in the required manner. It is also light weight approximately 55g which doesn't increase its overall weight.

Following graph shows the relationship of servo motor with respect of its torque and speed.

Fig. 5. Schematic Diagram of Servo Motor

$$\begin{aligned}
\dot{x}_1(t) &= -\left(\frac{R_a}{L_a}\right)x_1(t) - \left(\frac{K_b}{L_a}\right)x_3(t) + \left(\frac{1}{L_a}\right)u(t) \\
\dot{x}_2(t) &= x_3(t) \\
\dot{x}_3(t) &= -\left(\frac{B}{J}\right)x_3(t) + \left(\frac{K_T}{J}\right)x_1(t)
\end{aligned}$$

$$y(t) = x_2(t)$$

In vector-matrix form, the state and output equations are:

$$\begin{bmatrix} \dot{x}_1(t) \\ \dot{x}_2(t) \\ \dot{x}_3(t) \end{bmatrix} = \begin{bmatrix} -R_a/L_a & 0 & -K_b/L_a \\ 0 & 0 & 1 \\ K_T/J & 0 & -B/J \end{bmatrix} \begin{bmatrix} x_1(t) \\ x_2(t) \\ x_3(t) \end{bmatrix} + \begin{bmatrix} 1/L_a \\ 0 \\ 0 \end{bmatrix} u(t)$$

$$y(t) = \begin{bmatrix} 0 & 1 & 0 \end{bmatrix} \begin{bmatrix} x_1(t) \\ x_2(t) \\ x_3(t) \end{bmatrix}$$

In short-hand notation, the state and output equations are

$$\dot{x}(t) = Ax(t) + Bu(t), \qquad y(t) = Cx(t)$$

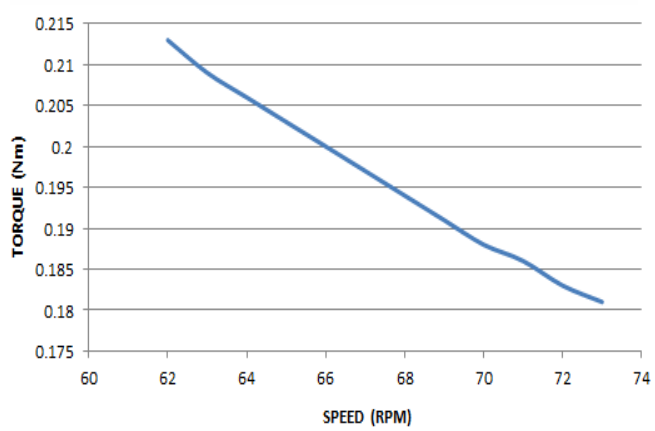

Fig.6. Speed vs. Torque Characteristics

The specification of Tower Pro Servo Motor mg995 is Weight: 55 g, Dimension: 40.7 x 19.7 x 42.9 mm approx, Stall torque: 8.5 kg·cm (4.8 V), 10 kg·cm (6 V), Operating speed: 0.2 s/60º (4.8 V), 0.16 s/60º (6 V), Operating voltage: 4.8 V a 7.2 V, Dead band width: 5 µs, Stable and shock proof double ball bearing design, Temperature range: 0 ºC – 55 ºC[4].

B. IP Camera

Internet protocol camera (IP) is a type of camera for making digitalized video used for CCTV or for surveillance purpose. It can send data using the

internet connection. One of its advantages includes that through a single wire the users can communicate in two way direction, i.e. it allows users to communicate with what they are viewing. IP cameras are flexible and can be moved anywhere within the network. These cameras are also able to work wirelessly [1].

VI. APPLICATION

One of its applications is in an industrial area where we need to move a light dangerous object or any other kind of object. It can also be used in underground construction areas where there is a great danger to human life. This paper describes the making of spider robot with manual (joystick) and autonomous function of spider. Other applications are: Spying on enemy region, uncovering and disarmament of secretive explosives. Used by bomb defusing squad, Video surveillance in mountainous areas. The spider robot can navigate over rough and bulging surface.

VII. CONCLUSION

This paper defines the design and operation of spider robot. Current status of this project is that our robot can freely move along all axes and can climb on stairs too. Till now our spider can be controlled by a wireless control remote.

Future enhancement of this project is that we are looking forward at the climbing abilities of the spider robot that is stairs climbing and also its smooth movement in bulging areas. This work basically defines a prototype of a robot moving in a way similar to original spider. This gives an idea that in future human can make any sort of robot which can resemble any sort of animal or bird which can help them in their respective works; even nowadays human robots are also made for specific purposes.

VIII. REFERENCES

[1] R. McNeill Alexander: Elastic Mechanisms in Animal Movement, Cambridge University Press, 1988, ISBN 978-0521341608

[2] J. Gordon Nichol & Kenneth J. Waldron, Biomimetic Leg Design for Untethered Quadruped Gallop

[3] W.Gronenberg, Fast actions in small animals: springs and click mechanisms, 1995

[4] Wang M, Zang X Z, Fan J Z, et al. Biological jumping mechanism analysis and modeling for frog robot. J Bio Eng, 2008, 5: 181–188

[5] Zaaf A, Damme R V, Herrel A, et al. Spatio-temporal gait characteristics of level and vertical locomotion in a ground-dwelling and a climbing gecko. J Exp Biol, 2001, 204: 1233–1246

[6] Mills, J. W. Stiquito: A small, simple, inexpensive legged robot, Part 2. Sensor &control. Indiana University Computer Science Department TR 363b, (in preparation).

[7] H. J. Chiel, R. D. Beer, R. D. Quinn, and K. S. Espenshied, "Robustness of a distributed neural network controller for locomotion in a hexapod robot," IEEE Trans. Robotics. Automate. vol. 8, pp. 293– 303, June 1992.

[8] F. L. Lewis, C. T. Abdullah and D. M. Dawson, Control of Robot Manipulators. New York: Macmillan, 1993.

[9] P. V. Nagy, S. Desa, and W. L. Whittaker, "Energy based stability measures for reliable locomotion of statically stable walkers: Theory and application," Int. J. Robotics Res., vol. 13, no. 3, pp. 272–287, 1994

[10] U. Asif, J. Iqbal and M. Ajmal Khan, "Kinematic Analysis of Periodic Continuous Gaits for a Bio- Mimetic Walking Robot," Proceedings of the 2011 IEEE International Symposium on Safety, Security and Rescue Robotics, pp. 80-85, Nov. 1-5, 2011, Kyoto, Japan.

IJEAST

INTERNATIONAL JOURNAL
OF ENGINEERING APPLIED SCIENCE
AND TECHNOLOGY

ABOUT IJEAST

International Journal of Engineering Applied Science and Technology (IJEAST) is a peer-reviewed, open access journal that publishes high-quality research papers in the field of Engineering, Applied Science and Technology.

IJEAST aims to provide a platform for researchers, academicians, and professionals to share their innovative ideas, research findings, and practical experiences with the global scientific community.

FOCUS AREAS

- Engineering
- Applied Science
- Technology
- Innovation & Development
- Interdisciplinary Studies

PEER REVIEWED
All submissions are rigorously peer reviewed to ensure quality.

OPEN ACCESS
Free and unrestricted access to research for all.

GLOBAL REACH
Connecting researchers and professionals worldwide.

TIMELY PUBLICATION
We ensure a swift and efficient publication process.

For more information, visit our website
www.ijeast.com

INTERNATIONAL JOURNAL
OF ENGINEERING APPLIED SCIENCE
AND TECHNOLOGY

editor@ijeast.com
www.ijeast.com
India

2455-2143