IJEAST

INTERNATIONAL JOURNAL
OF ENGINEERING APPLIED SCIENCE
AND TECHNOLOGY

VOLUME : 1 **ISSUE : 6** **Print / Issue Publication Date: 09-Oct-2016**

ISSN : 2455-2143

Indexed In

Google SCHOLAR · OPEN ACCESS · doi · Crossref

WWW.IJEAST.COM

editor@ijeast.com

International Journal of Engineering Applied Sciences and Technology, 2016
Vol. 1, Issue 6, ISSN No. 2455-2143, Pages 116-122
Published Online April - May 2016 in IJEAST (http://www.ijeast.com)

A MULTI USER DETECTION RECEIVER BASED ON DECISION FEEDBACK EQUALIZATION AND SUCCESSIVE INTERFERENCE CANCELLATION

Mr. Kuldeep Singh Chauhan
ME Scholar, Dept. of Electronics
IET, DAVV, INDORE (M.P.)

Mrs. Pratibha Singh
Asst. Professor, Dept. of Electronics
IET, DAVV, INDORE (M.P.)

Abstract— **Orthogonal Frequency Division Multiplexing (OFDM) has emerged as one of the key enablers of high data rate in contemporary communication systems. OFDM finds its applications in almost all high data rate applications such as 3G and 4G networks, LTE, LTE+, DVB, IEEE 802.11(WLANs), Wi-Fi, WiMax just to name a few.[1][4] One of the greatest challenges that that OFDM or for the matter of fact any wireless communication system faces is the frequency selective nature of wireless channels. Thus, due to frequency selective fading, OFDM systems suffer from BER degradation. Various equalization techniques have been investigated for alleviating this problem. One of the techniques that have been extremely promising is the Decision Feedback Equalization Technique (DFE). In practical situations, the BER degradation problem becomes even more serious for multi user detection in multicarrier systems like OFDM and MC-CDMA. In this paper we propose a Multi User Detection (MUD) receiver that is capable of equalizing receiver signal power and detect all user signals despite differences in received signal strengths and under varying BER conditions.**

Keywords— Orthogonal Frequency Division Multiplexing (OFDM), Decision Feedback Equalization (DFE), Multi User Detection (MUD)

I. INTRODUCTION

Orthogonal Frequency Division Multiplexing (OFDM) is a form of multi carrier communication in which a channel of Bandwidth **'B'** is divided into narrow sub channels of bandwidth '**B/N'**. Thus OFDM splices the channel of high data rate into parallel sub channels of lower data rate. The advantage of such an approach is manifold. Compared to Frequency Division Multiplexing (FDM), the spectral utilization is much better since allocating non overlapping bands and leaving guard bands does not remain a mandatory requirement. The only requirement remains maintaining the mutual orthogonality among sub carriers. Since OFDM is used predominantly for wireless systems, therefore designing such systems pose challenges like large attenuation, noise, multipath, interference, time variance and channel frequency selectivity. The major consequence of using OFDM in wireless systems is the random nature of wireless channels. At the frequency range of a few hundreds of MHz to a few GHz, different users perceive a different variant of the same channel due to effects like Doppler Shift and non-existence of ultra wideband (UWB) channels. Therefore a frequency selective wireless channel acting in conjugation with time varying effects has the potential to severely degrade the BER performance of the OFDM system which may lead to considerable errors and render non reliability to the wireless system.

The solution to the above mentioned problem is the design of equalizers which can equalize non flat channels and which should not be computationally to complex to be practically implemented on hardware. Another aspect that needs serious attention is the detection of multiple users in the presence varying BER conditions due to frequency selective channels. It is practical to consider that in a multi user situation, receivers having better BER conditions would over ride receivers with poor BER conditions which would in turn mean failure of the OFDM technology in Wireless Cellular Networks. To address this problem, an efficient multi user detection mechanism needs to be developed which would satisfactorily detect multiple users with varying BER conditions while being able to equalize the receiver power from different users. Such a system with decision feedback equalization along with a multi user reception scheme has been proposed in the subsequent sections.

II. OFDM THEORY:[1][2][4]

The graph below depicts the mutual orthogonality among the sub carriers in OFDM systems. It can be seen that when one sub carrier reaches its maximum, the other sub carriers are at their zero crossing.

International Journal of Engineering Applied Sciences and Technology, 2016
Vol. 1, Issue 6, ISSN No. 2455-2143, Pages 116-122
Published Online April - May 2016 in IJEAST (http://www.ijeast.com)

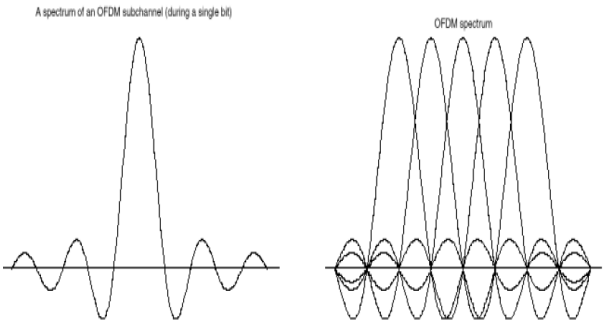

Fig1. Spectrum of OFDM[4]

OFDM System Description:

The figure below shows the basic block diagram of a general OFDM system.

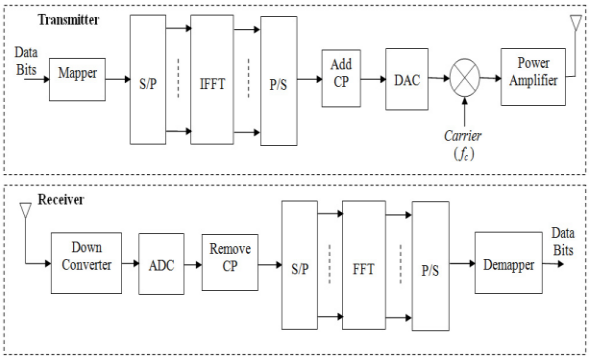

Fig.2 Block Diagram of OFDM[4]

The block diagram of OFDM can be understood as: N sub carriers are generated by the IDFT or the IFFT block which are modulated by a parallel binary message bit stream. Subsequently the parallel data stream is converted from parallel to serial and transmitted through the channel. Exactly the reverse process is carried out at the receiver end. Let N be the number of sub carriers to be modulated by the binary data source and *N* of these constellation points be stored for an interval of *Ts= N/R*, referred to as the OFDM symbol interval. A serial-to-parallel converter is used to achieve this. Now, each one of the *N* constellation points is used to modulate one of the subcarriers, then, all modulated subcarriers are transmitted simultaneously over the symbol interval *Ts.* The OFDM signal *x*(*n*) can be expressed as:

$$\mathbf{x[n]} = \frac{1}{N}\sum_{k=0}^{N-1} X[k]e^{\frac{j2\pi n}{N}} \quad 0 \le n < N \quad \textbf{(1)}$$

III. NEED FOR EQUALIZATION:[33]

The major challenge for OFDM systems is the frequency selective nature of Wireless Channels. This results in varying sub carrier gains. The graph below depicts the scenario.

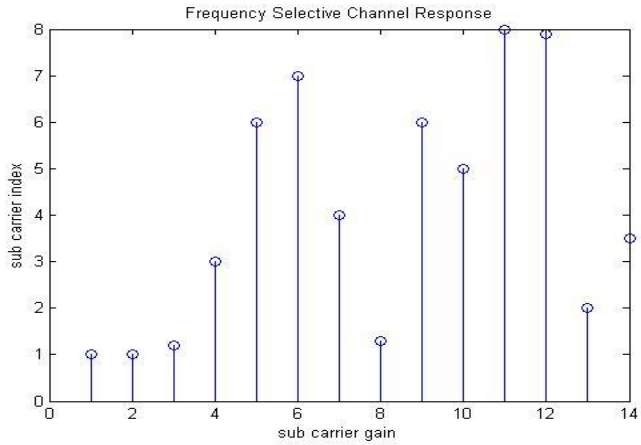

Fig.3 Variable Channel Gain

Due to varying sub carrier gains, the signal strength at the receiver varies. The result is a time varying Signal to Noise Ratio (SNR) and consequently a degraded BER performance. Such a scenario becomes a hindrance for reliable communication.

The Probability of Error **(P_e)** or Bit Error Rate (**BER)** is given by:

$$\mathbf{P_e = Q[sqrt(S/N)]} \quad \textbf{(2)}$$

Thus due to varying values of S/N, the BER weans where the signal strength falls. This causes increase in the errors. Since the frequency selectivity of the channel cannot be changed, therefore the concept of equalizers in introduced which when used in conjugation with the channel makes the channel response flat. This can be mathematically expressed as:

Generally an equalizer is designed such that it negates the effect of the imperfect nature of the channel's frequency response. This may be mathematically stated as:

$$\mathbf{H(z).E(z)=k} \quad \textbf{(3)}$$

So, after multiplication with the equalizers impulse response, the overall effect on the transmitted signal becomes analogous to '**Flat Channel'.**

Where H(z) represents the channels frequency response and E(z) represents the equalizer's frequency response.

IV. DECISION FEEDBACK EQUALIZATION

The block diagram of the conventional Decision Feedback Equalizer is shown in figure 4. The concept of Decision Feedback Equalizer can be understood with the help of the above diagram. In the block diagram show, the DFE mechanism is implemented using a multi tap filter whose tap weights are decided according to the error or actuating signal based on the comparison between the output and the input.

International Journal of Engineering Applied Sciences and Technology, 2016
Vol. 1, Issue 6, ISSN No. 2455-2143, Pages 116-122
Published Online April - May 2016 in IJEAST (http://www.ijeast.com)

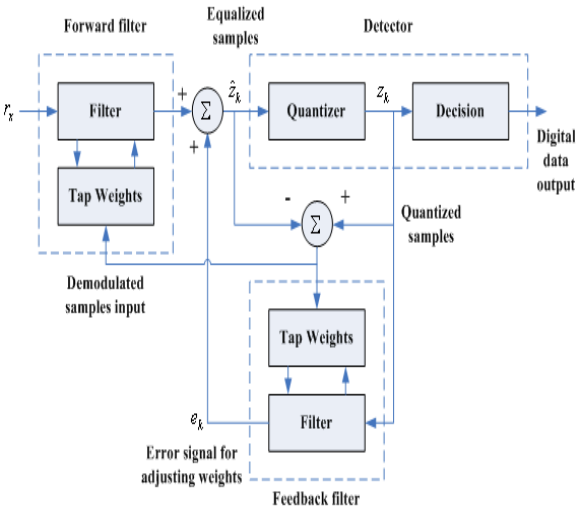

Fig.4 Decision Feedback (DFE) Equalization[32][33]

The DFE algorithm senses the channel and according to the training data obtained adjusts the tap weights. The major challenge of this approach is sensing the channel continuously and updating the tap weights.

V. MULTI USER DETECTION (MUD)[22][26][32]

The MUD approach is an efficient technique of equalizing the received signal power and is capable of detecting different user signals under varying signal strengths or BER conditions. The MUD approach requires the following information:

a) Individual signal strength of each user:

$$S_i = g_i\sqrt{P_i} \qquad (4)$$

Where S represents i^{th} signal power,
'g' represents gain of the ith path
P represents the power of the ith signal

b) The cross correlation of the spreading function applied on the data stream:

$$\text{Spreading Function} = R_i,j(k)$$

(c) The noise statistics for the kth sample i.e. $\mathbf{n_i(k)}$

Thus the different signals corresponding to different users can be mathematically written as:

$$r_k = R_k.D.S_k + n_k \qquad (5)$$

Where D represents the signal strength matrix corresponding to different signal strengths given by:

$$S_i = g_i\sqrt{P_i} \qquad (6)$$

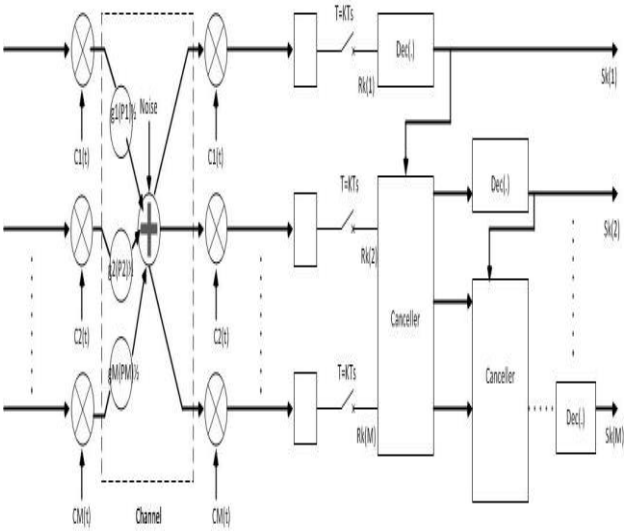

Fig.5 Multi User Detection (MUD) Receiver using Decision Feedback Mechanism[26][31][32]

The above diagram helps us to understand the concept behind the decision feedback mechanism applied to the MUD receiver. The main motive behind the design of such a receiver is to detect the strongest received signal under different signal strengths and subsequently cancel its interference effects from the other received signals.

VI. PROPOSED ALGORITHM

1. Let the various signal strengths be:
$\mathbf{S_1.G_1, S_2.G_2, S_3.G_3 ..... S_n.G_n}$
It can be observed that the signal power of transmitter is multiplied with the corresponding channel gain where the channel gain for different users varies due to frequency selectivity of the channel.
Considering that we have the information about the signal strengths given by equation.7

$$P_1 g_1^{\,2} > P_2 g_2^{\,2} > \ldots\ldots\ldots\ldots\ldots\ldots \quad (7)$$

We decide the strongest among all the received user signals.
2. Detect the **k^{th} strongest** signal among all the signals using the following equation:

$$S_k = dec(P_i G_i)^M \qquad (8)$$

3. Cancel the first strongest user interference at the receiver end according to the equation:

$$y_{e+1}^{(1)} = y_e^{(1)} _ g_e\sqrt{} \qquad (9)$$

Here we subtract the interference from the strongest interfering signal from each signal received at the receiver using the Decision Feedback actuating Signal $\mathbf{e(k)S_k^{(e)}}$

4. let **k=1,** and repeat the above process for all the received signals up to **k=M**

5. Plot the BER performance for the proposed MUD DFE algorithm and MUD reception without DFE mechanism.

VII. EXPERIMENTS & RESULTS

The results for the different cases of user detection for varying BER conditions have been plotted. The results clearly exhibit the improvement of the BER performance of the OFDM system for multi user scenarios.

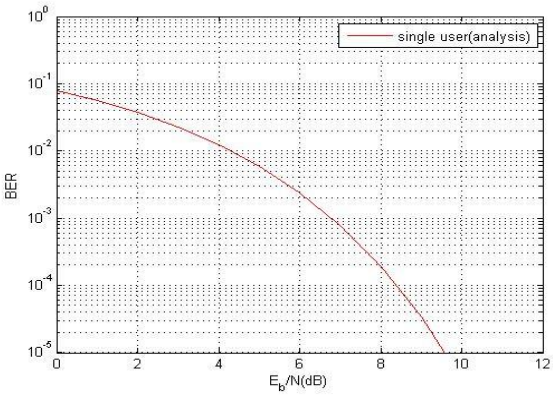

Fig.6 Single User Analysis

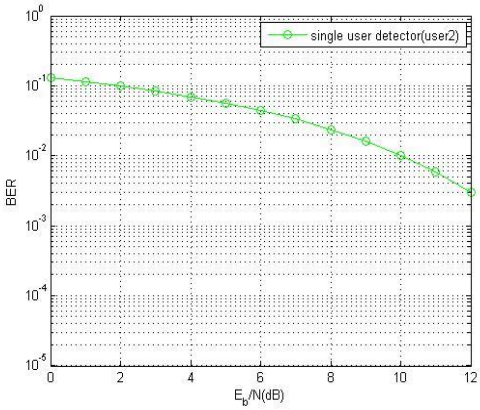

Fig.7 Single User detection (user2)

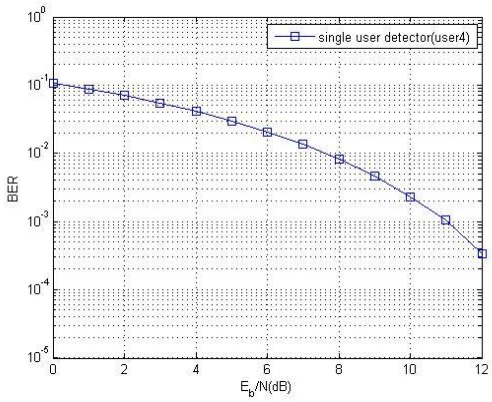

Fig.8 Single User Detection (User 4)

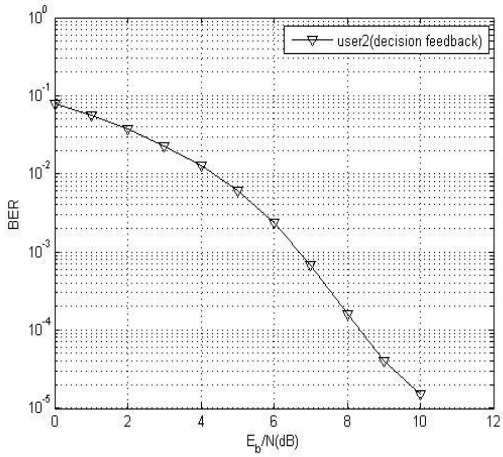

Fig. 9 Detection of user 2, with decision feedback

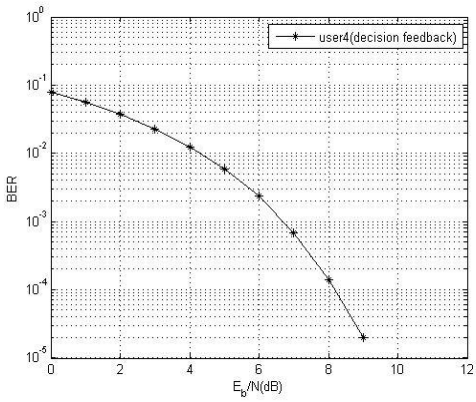

Fig 10 Detection of user 2, with decision feedback

International Journal of Engineering Applied Sciences and Technology, 2016
Vol. 1, Issue 6, ISSN No. 2455-2143, Pages 116-122
Published Online April - May 2016 in IJEAST (http://www.ijeast.com)

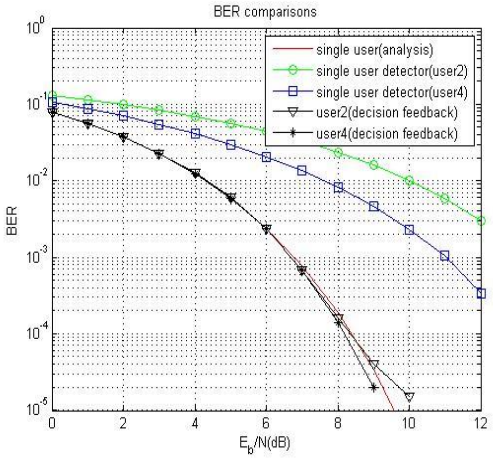

Fig.11 Comparison of different techniques under MUD conditions

User Analysis	BER	SNR required
Single user 2 with conventional Detection	10^{-2}	10dB
Single user 2 with Proposed Algorithm	10^{-2}	4dB
Single user 4 with conventional Detection	10^{-2}	7dB
Single user 4 with Proposed Algorithm	10^{-2}	4dB
Signal Detection with only one User	10^{-2}	4dB

Table.1 Comparison of proposed technique with conventional technique

Experimental Analysis of Results:
The simulation shown above has been run for 100000 samples. The spreading function has been implemented using a random matrix of size 31x4. The noise added in the channel has been considered to be Gaussian. It can be clearly seen from the graphs that different received signals corresponding to different users have different BER conditions. **Table.1** renders insight into the working of the proposed technique. It can be seen that the BER falls much more steeply for users 2 and 4 in case of the proposed DFE MUD receiver compared to singular detection of the same signals. Therefore the proposed technique would need much less SNR boiling down to lower Signal Power to achieve same BER performance compared to conventional techniques. Conversely, the same SNR would result in much improved BER performance for the proposed technique compared to the conventional technique. Also it can be seen that the proposed technique achieves results almost similar to a single user scenario.

VIII. CONCLUSION

In this paper, we analyzed the challenges faced by practical multi user OFDM systems under frequency selective channel conditions. It was shown that frequency selective nature of wireless channels resulted in different sub carrier gains and hence variable BER conditions for different users. It could be inferred that due to different varying conditions, some of the users suffer more in practical situations compared to other users. To mitigate this problem, a MUD receiver using the decision feedback mechanism was proposed which is based on successive interference cancellation after the strongest receiver signal is detected. From the results, it can be concluded that such an approach achieves better BER performance compared to the conventional approach thereby facilitating the accurate reception of different user signals under varying BER conditions. It can be observed from the results that the proposed technique attains results approximately similar to single user scenario thus pointing towards the fact that strong interference can be almost nullified.

IX. REFERENCES

[1] K. Tu, T. Duman, J. Proakis, and M. Stojanovic, “Cooperative MIMOOFDM communications: Receiver design for Doppler-distorted under wateracoustic channels,” in Proc. of 44th Asilomar Conf. Signals,
.

[2] M. Stojanovic, “Low complexity OFDM detector for underwater channels,” in Proc. of MTS/IEEE OCEANS Conference, Boston, MA, Sept. 18-21, 2006.

[3] B. Li, S. Zhou, M. Stojanovic, L. Freitag, and P. Willett, “Multicarrier communication over underwater acoustic channels with non uniform Doppler shifts,” IEEE Journal of Oceanic Engineering, vol. 33, no. 2, pp. 198–209, Apr. 2008.

[4] Peak to Average Power Ratio in OFDM Systems: A Survey and Taxonomy. Yasir Rahmatalla, Sisadri Mohan IEEE 2013.

[5] R. Otnes and T. H. Eggen, “Underwater acoustic communications: Long term test of Turbo equalization in shallow water,” IEEE Journal of Oceanic Engineering, vol. 33, no. 3, pp. 321–334, July 2008.

[6] J. Huang, S. Zhou, and P. Willett, "Non binary LDPC coding for multicarrier underwater acoustic communication," IEEE Journal on Selected Areas in Communications, vol. 26, no. 9, pp. 1684–1696, Dec. 2008.

[7] T. Kang and R. Iltis, "Iterative carrier frequency offset and channel estimation for underwater acoustic OFDM systems," IEEE Journal on Selected Areas in Communications, vol. 26, no. 9, pp. 1650–1661, Dec. 2008.

[8] G. Leus and P. van Walree, "Multiband OFDM for covert acoustic communications," IEEE Journal on Selected Areas in Communications, vol. 26, no. 9, pp. 1662–1673, Dec. 2008.

[9] F. Qu and L. Yang, "Basis expansion model for underwater acoustic channels?" in Proc. of MTS/IEEE OCEANS Conference, Quebec City, Canada, Sept. 15-18, 2008.

[10] P. van Walree and G. Leus, "Robust underwater telemetry with adaptive Turbo multiband equalization," IEEE Journal of Oceanic Engineering, vol. 34, no. 4, pp. 645–655, Oct. 2009
.

[11] C. R. Berger, S. Zhou, J. Preisig, and P. Willett, "Sparse channel estimation for multicarrier underwater acoustic communication: From subspace methods to compressed sensing," IEEE Transactions on Signal Processing, vol. 58, no. 3, pp. 1708–1721, Mar. 2010.

[12] C. R. Berger, W. Chen, S. Zhou, and J. Huang, "A simple and effective noise whitening method for underwater acoustic orthogonal frequency division multiplexing," Journal of Acoustical Society of America, vol. 127, no. 4, pp. 2358–2367, Apr. 2010.

[13] Y. R. Zheng, C. Xiao, T. C. Yang, and W. B. Yang, "Frequency domain channel estimation and equalization for shallow-water acoustic communications," Elsevier Journal of Physical Communication, vol. 3, pp. 48–63, Mar. 2010.

[14] T. Kang, H. C. Song, W. S. Hodgkiss, and J. S. Kim, "Long-range multicarrier acoustic communications in shallow water based on iterative sparse channel estimation," Journal of Acoustical Society of America, vol. 128, no. 6, Dec. 2010.

[15] K. Tu, D. Fertonani, T. M. Duman, M. Stojanovic, J. G. Proakis, and P. Hursky, "Mitigation of intercarrier interference for OFDM over time-varying underwater acoustic channels," IEEE Journal of Oceanic Engineering, vol. 36, no. 2, pp. 156–171, Apr. 2011.

[16] J.-Z. Huang, S. Zhou, J. Huang, C. Berger, and P. Willett, "Progressive inter-carrier interference equalization for OFDM transmission over time varying underwater acoustic channels," IEEE J. Select. Topics Signal Proc., vol. 5, no. 8, pp. 1524 – 1536, Dec. 2011.

[17] H. Wan, R.-R. Chen, J. W. Choi, A. Singer, J. Preisig, and B. Farhang- Boroujeny, "Markov Chain Monte Carlo detection for frequency selective channels using list channel estimates," IEEE J. Select. Topics Signal Proc., vol. 5, no. 8, pp. 1537 – 1547, Dec. 2011.

[18] Z.-H. Wang, S. Zhou, G. B. Giannakis, C. R. Berger, and J. Huang, "Frequency-domain oversampling for zero-padded OFDM in underwater acoustic communications," IEEE Journal of Oceanic Engineering, vol. 1, no. 37, pp. 14 – 24, Jan. 2012.

[19] J. Ling and J. Li, "Gibbs-sampler-based semiblind equalizer in underwater acoustic communications," IEEE Journal of Oceanic Engineering, vol. 37, no. 1, pp. 1–13, Jan. 2012.

[20] Z.-H. Wang, S. Zhou, J. Catipovic, and P. Willett, "Parameterized cancellation of partial-band partial-block-duration interference for underwater acoustic OFDM," IEEE Transactions on Signal Processing, vol. 60, no. 4, pp. 1782–1795, Apr. 2012.

[21] X. Xu, Z.-H. Wang, S. Zhou, and L. Wan, "Parameterizing both path amplitude and delay variations of underwater acoustic channels for block decoding of orthogonal frequency division multiplexing," The Journal of the Acoustical Society of America, vol. 131, pp. 4672–4679, June 2012
.

[22] Z.-H.Wang, S. Zhou, J. Preisig, K. R. Pattipati, and P.Willett, "Clustered adaptation for estimation of time-varying underwater acoustic channels," IEEE Transactions on Signal Processing, vol. 60, no. 6, pp. 3079–3091, June 2012.

[23] D. B. Kilfoyle, J. C. Preisig, and A. B. Baggeroer, "Spatial modulation experiments in the underwater acoustic channel," IEEE Journal of Oceanic Engineering, vol. 30, no. 2, pp. 406–415, Apr. 2005.

[24] H. C. Song, P. Roux, W. S. Hodgkiss, W. A. Kuperman, T. Akal, and M. Stevenson, "Multiple-input/multiple-output coherent time reversal communications in a shallow water acoustic channel," IEEE Journal of Oceanic Engineering, vol. 31, no. 1, pp. 170–178, Jan. 2006.

[25] S. Roy, T. M. Duman, V. McDonald, and J. G. Proakis, "High rate communication for underwater acoustic channels using multiple transmitters and space-time coding: Receiver structures and experimental

results," IEEE Journal of Oceanic Engineering, vol. 32, no. 3, pp. 663–688, July 2007.

[26] J. Ling, T. Yardibi, X. Su, H. He, and J. Li, "Enhanced channel estimation and symbol detection for high speed MIMO underwater acoustic communications," Journal of Acoustical Society of America, vol. 125, no. 5, pp. 3067–3078, May 2009.

[27] J. Tao, Y. R. Zheng, C. Xiao, and T. C. Yang, "Robust MIMO underwater acoustic communications using turbo block decision-feedback equalization," IEEE Journal of Oceanic Engineering, vol. 35, no. 4, pp. 948–960, Oct. 2010.

[28] J. Tao, J. Wu, Y. R. Zheng, and C. Xiao, "Enhanced MIMO LMMSE turbo equalization: algorithm, simulations and undersea experimental results," IEEE Transactions on Signal Processing, vol. 59, no. 8, pp. 3813–3823, Aug. 2011.

[29] J. Zhang and Y. R. Zheng, "Frequency-domain turbo equalization with soft successive interference cancellation for single carrier MIMO underwater acoustic communications," IEEE Trans. Wireless Communication., vol. 10, no. 9, pp. 2872–2882, Sep. 2011.

[30] A. Song and M. Badiey, "Time reversal multiple-input/multiple-output acoustic communication enhanced by parallel interference cancellation," Journal of Acoustical Society of America, vol. 131, no. 1, pp. 281–291, Jan. 2012.

[31] Iterative Frequency Domain Detection of I-A pre coded MC-CDMA systems.
A Silva, S Teodoro R Dinis
IEEE Transactions, 2014

[32] Opportunistic Relay Selection for Cooperative Relaying in Co channel Interference Contaminated Networks.
B.Zhang M El Hajjar L Hanzo Vehicular Technology IEEE 2014.

[33] Signals and Systems, by Simon Haykin. Wiley India.

IJEAST

INTERNATIONAL JOURNAL OF ENGINEERING APPLIED SCIENCE AND TECHNOLOGY

AUTHORS

Mr. Kuldeep Singh Chauhan

Mrs. Pratibha Singh

ABOUT IJEAST

International journal of Engineering Applied Science and Technology (IJEAST) is a peer-reviewed, open access journal that publishes high - quality research paper in the field of Engineering, Applied Science and Technology.

IJEAST aims to provide a platform for researchers, academicians, and professionals to share their innovative ideas, research findings, and practical experiences with the global scientific community.

JOURNAL METRICS

H-INDEX	i10-INDEX	IJEAST CITATIONS	PEER-REVIEWED & OPEN ACCESS
33	154	9,647 (IJEAST CITATIONS)	PUBLISHED MONTHLY

PEER REVIEWED

All submission are rigorously peer reviewed to ensure quality.

AUTHORS ARE OUR PRIORITY

We value our authors and recognize their contribution to the advancement of research and knowledge.

OPEN ACCESS

Free and unrestricted access to research for all.

GLOBAL REACH

Connecting researchers and professionals worldwide.

TIMELY PUBLICATION

We ensure a swift and efficient publication process.

For more information, visit our website
www.ijeast.com

IJEAST

editor@ijeast.com

www.ijeast.com

India

2455-2143